T 886 357 367 08
F 886 357 387 49
A 7F., No.35, Xuefu Rd., East Dist.,
Hsinchu City 30068, Taiwan

EnzyTek TECHNOLOGY

BTM-QC3086-2

Preliminary Datasheet

(Version 01)

Issued date: November 14, 2023

EnzyTek Bluetooth Module – BTM-QC3086-2

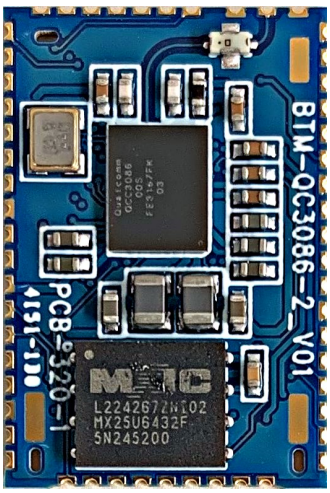

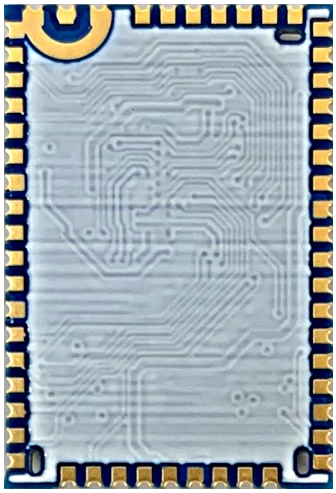

Product Description

BTM-QC3086-2 is a highly integrated small form factor (19x13 mm^2) Bluetooth module which adopts Qualcomm QCC3086 as core chip for Bluetooth operation.

QCC3086 WLCSP is a system on-chip (SoC) with on-chip Bluetooth audio and programmable application processor. It includes advanced power management, Li-ion battery charger, light-emitting diode (LED) drivers, and flexible interfaces including inter- integrated circuit sound (I^2S), inter-integrated circuit interface (I^2C), universal asynchronous receiver transmitter (UART), and programmable input/output (PIO).

FEATURES

- Highly integrated BT v5.4 QCC3086 module with embedded Balun + Filter + Crystal + Flash
- Bluetooth LE Audio
- 240 MHz Qualcomm® Kalimba™ audio DSP
- 32/80 MHz Developer Processor for applications
- Firmware Processor for system
- High-performance 24-bit stereo audio interface
- Digital and analog microphone interfaces
- Flexible PIO controller and LED pins with PWM support
- Serial interfaces: UART, Bit Serializer (I^2C/SPI), USB 2.0
- Advanced audio algorithms
- Qualcomm® aptX™, aptX™ HD Audio
- aptX Adaptive, enabled using license key
- Integrated PMU: Dual SMPS for system/digital circuits, Integrated Li-ion battery charger
- Frequency: 2402 ~ 2480 GHz
- TX Output Power: 11 dBm(Max)
- RX Sensitivity: -90 dBm(Max)
- Dimension: 19 mm x 13 mm x 2.8 mm (L x W x H)
- Temperature: -10~+70 °C

Applications

- USB/Analog Audio dongles
- LE Unicast Audio and broadcast Audio source applications.
- Customization FW for unique wireless applications.

Audio subsystem

- 32-bit Kalimba audio digital signal processor (DSP) cores with flexible clocking from 2 MHz to 240 MHz to allow optimization and trade-off performance vs. power consumption
- DSPs execute code from ROM
- OEM and third party developed features can run from program RAM
- 384 KB program RAM and 1024 KB data RAM

Application subsystem

- Dual core application subsystem 32/80 MHz operation
- 32-bit Firmware Processor:
  - Runs Bluetooth upper stack
  - Profiles, house-keeping code
  - House-keeping code
- 32-bit Developer Processor:
  - Developer applications
- Both cores execute code from external flash memory using QSPI clocked at 32 MHz or 80 MHz
- On-chip caches per core allow for optimized performance and power consumption

Bluetooth subsystem

- Qualified to Bluetooth v5.4 specification including 2 Mbps Bluetooth low energy and Bluetooth Low Energy Isochronous Channels
- Qualcomm® Bluetooth High Speed Link
- Single ended antenna connection with on-chip balun and Tx/Rx switch
- Bluetooth, Bluetooth low energy, and mixed topologies supported
- Class 1 support

Li-ion battery charger

- Integrated battery charger supporting:
  - Internal mode (up to 200 mA)
  - External mode (up to 1.8 A)
- Thermal monitoring and management are available in application software

Block Diagram

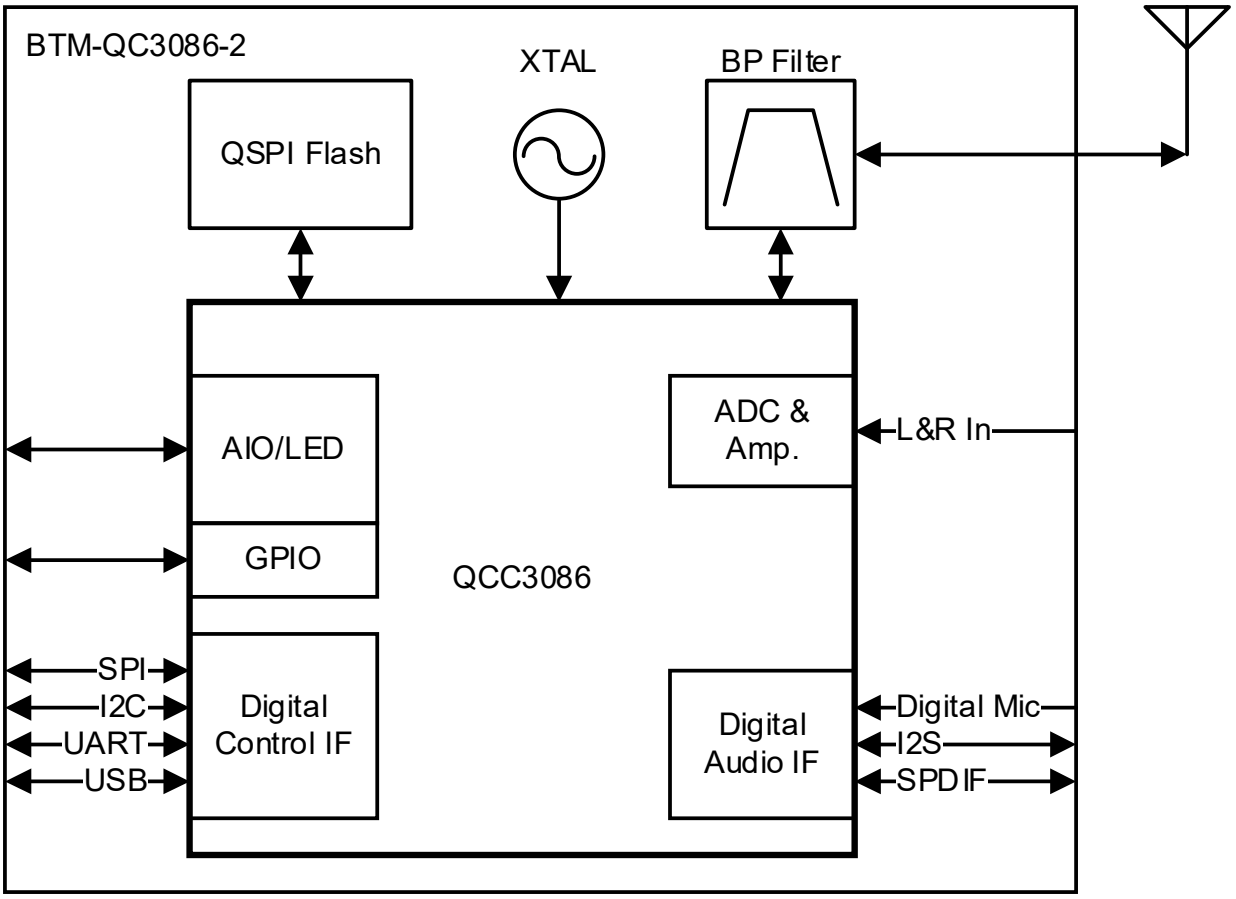

T 886 357 367 08
F 886 357 387 49
A 7F., No.35, Xuefu Rd., East Dist.,
Hsinchu City 30068, Taiwan

Pinout Diagram & Dimension

Unit: mm

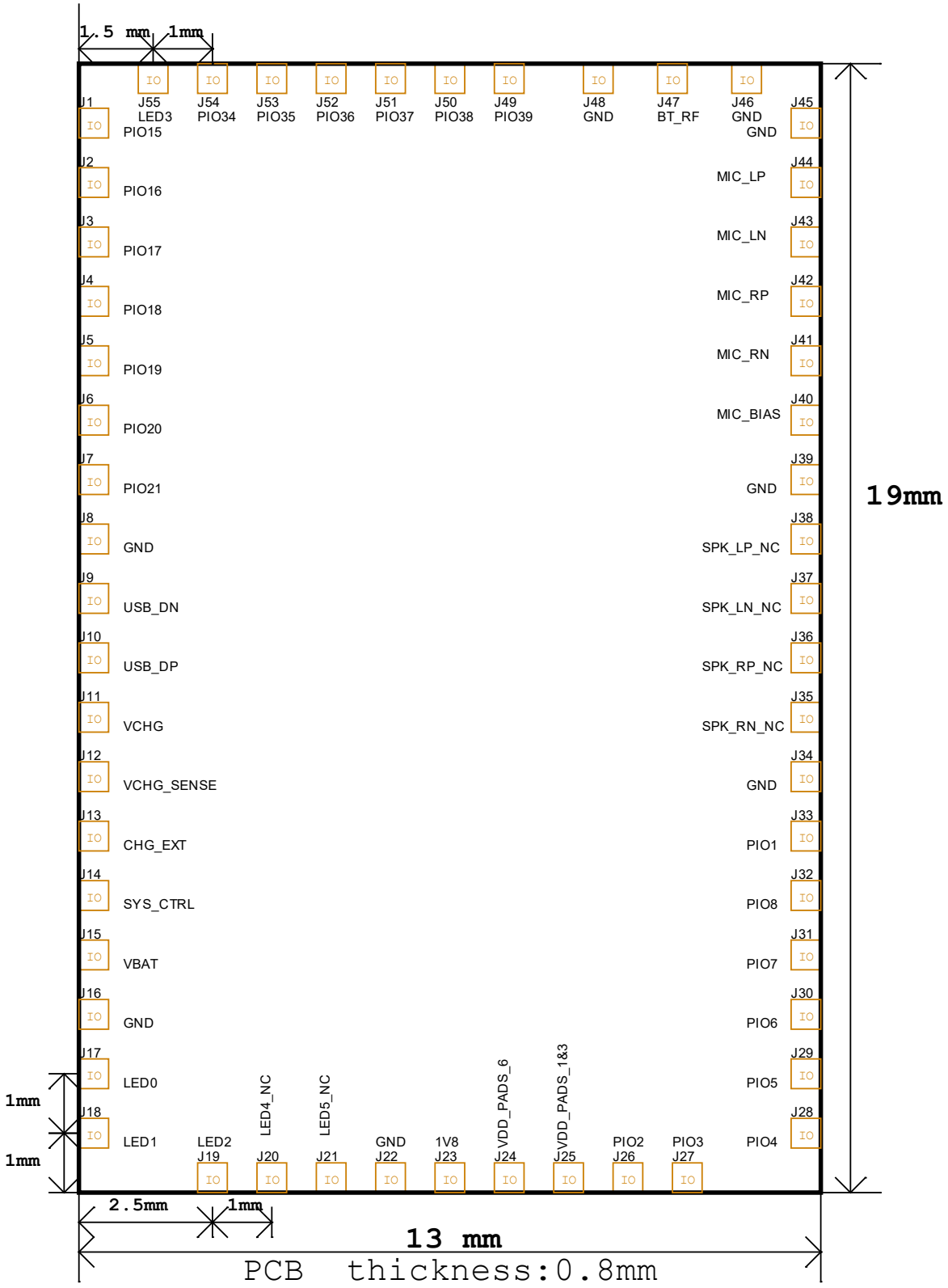

T 886 357 367 08
F 886 357 387 49
A 7F., No.35, Xuefu Rd., East Dist.,
Hsinchu City 30068, Taiwan

I/O PIN LISTING

Pin No.	Pin Name	Type	Description
1	PIO15	Digital: Bidirectional with programmable strength internal pull- up/pull-down	Programmable I/O line 15. Alternative function: MCLK_OUT
2	PIO16	Digital: Bidirectional with programmable strength internal pull- up/pull-down	Programmable I/O line 16. Alternative function: PCM_CLK
3	PIO17	Digital: Bidirectional with programmable strength internal pull- up/pull-down	Programmable I/O line 17. Alternative function: PCM_SYNC
4	PIO18	Digital: Bidirectional with programmable strength internal pull- up/pull-down	Programmable I/O line 18. Alternative function: PCM_DOUT[0]
5	PIO19	Digital: Bidirectional with programmable strength internal pull- up/pull-down	Programmable I/O line 19. Alternative function: PCM_DIN[0]
6	PIO20	Digital: Bidirectional with programmable strength internal pull- up/pull-down	Programmable I/O line 20. Alternative function: PCM_DOUT[1]
7	PIO21	Digital: Bidirectional with programmable strength internal pull- up/pull-down	Programmable I/O line 21. Alternative function : PCM_DOUT[2]
8	GND	Power	Ground
9	USB_DN	Digital	USB Full Speed device D- I/O.
10	USB_DP	Digital	USB Full Speed device D+ I/O.
11	VCHG	Analog	VCHG voltage input.
12	VCHG_SENSE	Analog	Charger input sense pin after external mode sense-resistor. High impedance. Note : If using internal charger or no charger, connect VCHG_SENSE direct to VCHG.
13	CHG_EXT	Analog	External charger transistor current control. Connect to base of external charger transistor as per application schematic.
14	SYS_CTRL	Digital input	Typically connected to an ON/OFF push button. Boots device in response to a button press when power is still present from battery and/or charger but software has placed the device in the OFF or DORMANT state. Additionally useable as a digital input in normal operation. No pull. Additional function: PIO[0] input only
15	VBAT	Power	Battery voltage input.
16	GND	Power	Ground

17	LED0/AIO0	Analog or digital input/ open drain output.	General-purpose analog/digital input or open drain LED output.
18	LED1/AIO1	Analog or digital input/ open drain output.	General-purpose analog/digital input or open drain LED output.
19	LED2/AIO2	Analog or digital input/ open drain output.	General-purpose analog/digital input or open drain LED output.
20	NC	NA	NA
21	NC	NA	NA
22	GND	Power	Ground
23	1V8	Power	1.8V output
24	VDD_PADS_6	Power	1.8 V/3.3 V PIO supply
25	VDD_PADS_1&3	Power	1.8 V/3.3 V PIO supply
26	PIO2	Digital: Bidirectional with programmable strength internal pull- up/pull-down	Programmable I/O line 2. Alternative function: TBR_MISO[3]
27	PIO3	Digital: Bidirectional with programmable strength internal pull- up/pull-down	Programmable I/O line 3. Alternative function: TBR_MISO[2]
28	PIO4	Digital: Bidirectional with programmable strength internal pull- up/pull-down	Programmable I/O line 4. Alternative function: TBR_MOSI[1]
29	PIO5	Digital: Bidirectional with programmable strength internal pull- up/pull-down	Programmable I/O line 5. Alternative function: TBR_MISO[1]
30	PIO6	Digital: Bidirectional with programmable strength internal pull- up/pull-down	Programmable I/O line 6. Alternative function: TBR_MOSI[0]
31	PIO7	Digital: Bidirectional with programmable strength internal pull- up/pull-down	Programmable I/O line 7. Alternative function: TBR_MISO[0]
32	PIO8	Digital: Bidirectional with programmable strength internal pull- up/pull-down	Programmable I/O line 8. Alternative function: TBR_CLK
33	PIO1	Digital: Bidirectional with programmable strength internal pull- up/pull-down	Automatically defaults to RESET# mode when the device is unpowered, or in off modes. Reconfigurable as a PIO after boot. Alternative function: Programmable I/O line 1
34	GND	Power	Ground
35	NC	NA	NA
36	NC	NA	NA
37	NC	NA	NA
38	NC	NA	NA
39	GND	Power	Ground
40	MIC_BIAS	Analogue out	Mic bias output.

41	MIC_RN	Analogue in	Microphone differential 2 input, negative. Alternative function: Differential audio line input right, negative
42	MIC_RP	Analogue in	Microphone differential 2 input, positive. Alternative function: Differential audio line input right, positive
43	MIC_LN	Analogue in	Microphone differential 1 input, negative. Alternative function: Differential audio line input left, negative
44	MIC_LP	Analogue in	Microphone differential 1 input, positive. Alternative function: Differential audio line input left, positive
45	GND	Power	Ground
46	GND	Power	Ground
47	BT_RF	RF	Bluetooth transmit/receive.
48	GND	Power	Ground
49	PIO39	Digital: Bidirectional with programmable strength internal pull- up/pull-down	Programmable I/O line 39. Alternative function: QSPI2_IO[3]
50	PIO38	Digital: Bidirectional with programmable strength internal pull- up/pull-down	Programmable I/O line 38. Alternative function: QSPI2_CS#
51	PIO37	Digital: Bidirectional with programmable strength internal pull- up/pull-down	Programmable I/O line 37. Alternative function: QSPI2_IO[1]
52	PIO36	Digital: Bidirectional with programmable strength internal pull- up/pull-down	Programmable I/O line 36. Alternative function: QSPI2_IO[2]
53	PIO35	Digital: Bidirectional with programmable strength internal pull- up/pull-down	Programmable I/O line 35. Alternative function: QSPI2_CLK
54	PIO34	Digital: Bidirectional with programmable strength internal pull- up/pull-down	Programmable I/O line 34. Alternative function: QSPI2_IO[0]
55	LED3/AIO3	Analog or digital input/ open drain output.	General-purpose analog/digital input or open drain LED output.

PS: The PIO definition can be customized for the application, please contact with EnzyTek for detail FW specification.

Radio Characteristics

VCC = 3.3V and test under Non-EDR environment

		Min	Typ	Max	Bluetooth Spec.	Unit
Maximum RF transmit power		9	10	11	0 ~ +20	dBm
Sensitivity, 0.1% BER	2.402 GHz			-90	≦-70	dBm
	2.411 GHz			-90		dBm
	2.480 GHz			-90		dBm
RF Power control range			20		≧16	dB
RF Power control resolution		3.2		5.8	2dB≦ step ≦8dB	dBm
20dB bandwidth for modulated carrier			910		≦1000	kHz
△f1avg Max. modulation		155		173	140 < f1avg < 175	kHz
△f2max Min.. modulation		135		175	≧115	kHz
△f1avg / △f2avg		0.9	0.94	1.0	≧0.80	
Initial Carrier Center Frequency Tolerance		-15		+15	≦±75	kHz
Frequency Drift Rate		-300		300	≦±400	Hz/us
Frequency Drift (single slot packet)		-20	-10	20	≦±25	kHz
Frequency Drift (five slot packet)		-20	-12	20	≦±40	kHz

Battery input pin specification

VBAT	Min	Typ	Max	Unit
Operating voltage	2.8	3.7	4.6	V
Boot voltage	3.0	-	4.6	V
Software power-off threshold	-	3.0	-	V
USB dead/weak battery rising threshold	3.14	3.3	3.46	V
USB dead/weak battery hysteresis	50	-	120	mV

Charger input pin specification

VCHG	Min	Typ	Max	Unit
Operating voltage (full device specification)	4.75	5	5.5	V
Operating voltage (reduced charger specification)	4.0	5	5.5	V
VCHG_PRESENT rising threshold	3.4	3.6	4.0	V
VCHG_PRESENT hysteresis	30	-	115	mV
Full operating range	VCHG_ PRESENT	-	6.5	V
On chip pull-down (disabled when VCHG_PRESENT = 1)	10	20	30	kΩ

- The VCHG pin is tolerant of voltages up to 6.5 V, but the standard specified operating range of the charger is up to 5.5 V. With VCHG at 6.5 V, the typical battery charge current will be approximately 5% greater than at 5.5 V.

Microphone Bias

Parameter	Conditions	Min	Typ	Max	Unit
Output voltage (Tunable, step = 0.1 V)	-	1.5	-	2.1	V
Output current capability	-	0.07	-	6.0	mA
Output noise	B/W = 20 Hz → 20 kHz Unweighted	4.5	5.1	7.3	μVrms
Crosstalk Between Microphones	Using recommended application circuit	-	80	-	dB
Load capacitance [a]	From parasitic PCB routing and package	-	-	0.1	nF

T 886 357 367 08
F 886 357 387 49
A 7F., No.35, Xuefu Rd., East Dist.,
Hsinchu City 30068, Taiwan

Stereo Codec: Analogue to Digital Converters:

High-quality (HQADC) differential audio input

Parameter	Conditions	Min	Typ	Max	Unit
Output Sample Width	-	-	-	24	Bits
Output Sample Rate, F_{sample}	-	8	-	96	kHz
Input level	-	-	-	2.4	V pk-pk
Input impedance	0 dB to 24 dB analog gain	-	20	-	kΩ
	27 dB to 39 dB analog gain	-	10	-	kΩ
SNR	F_{in} = 1 kHz F_{sample} = 48 kHz Input Amp. = 2.4 V_{pk-pk} B/W = 20 Hz to 20 kHz A-Weighted	-	99.0	-	dB
THD+N	F_{in} = 1 kHz F_{sample} = 48 kHz Input Amp. = 2.4 V_{pk-pk} B/W = 20 Hz to 20 kHz	-	-94.9	-	dB
Analog gain	3 dB steps	0	-	39	dB

PCB Layout Guide

Footprint dimensions

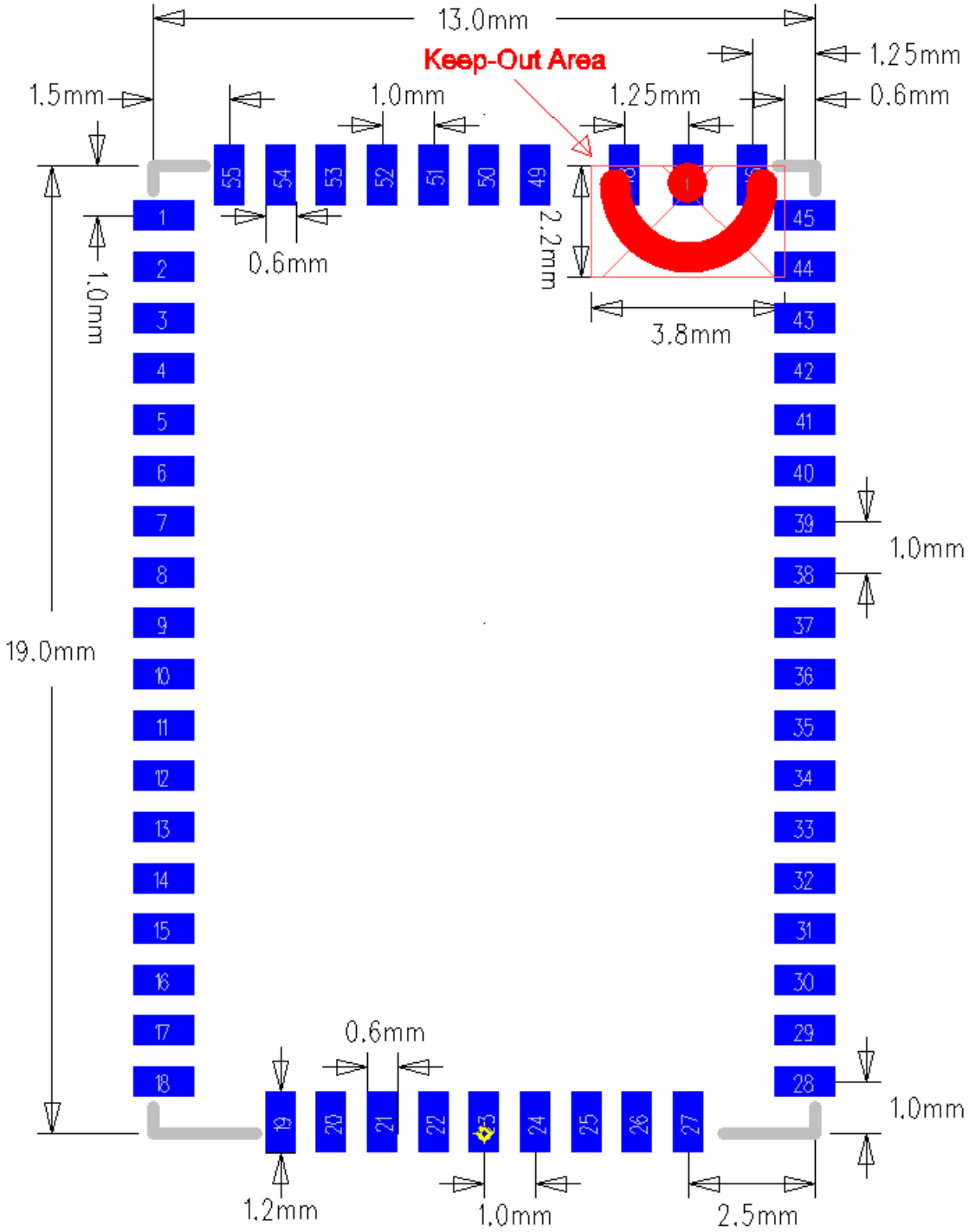

BT Stereo Headset Application Circuit

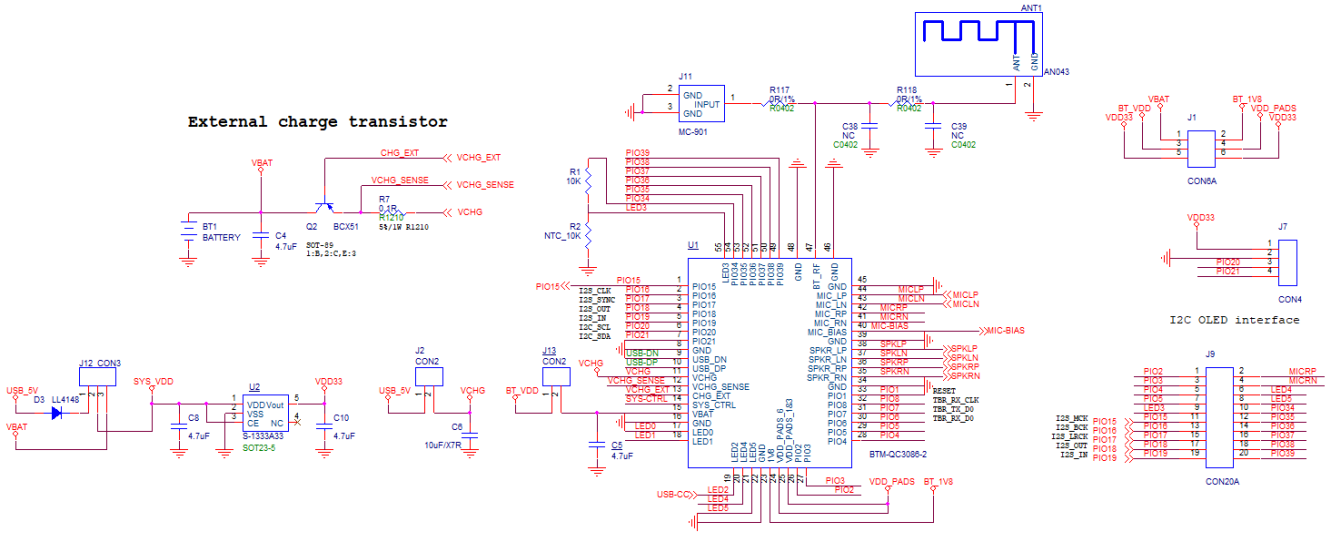

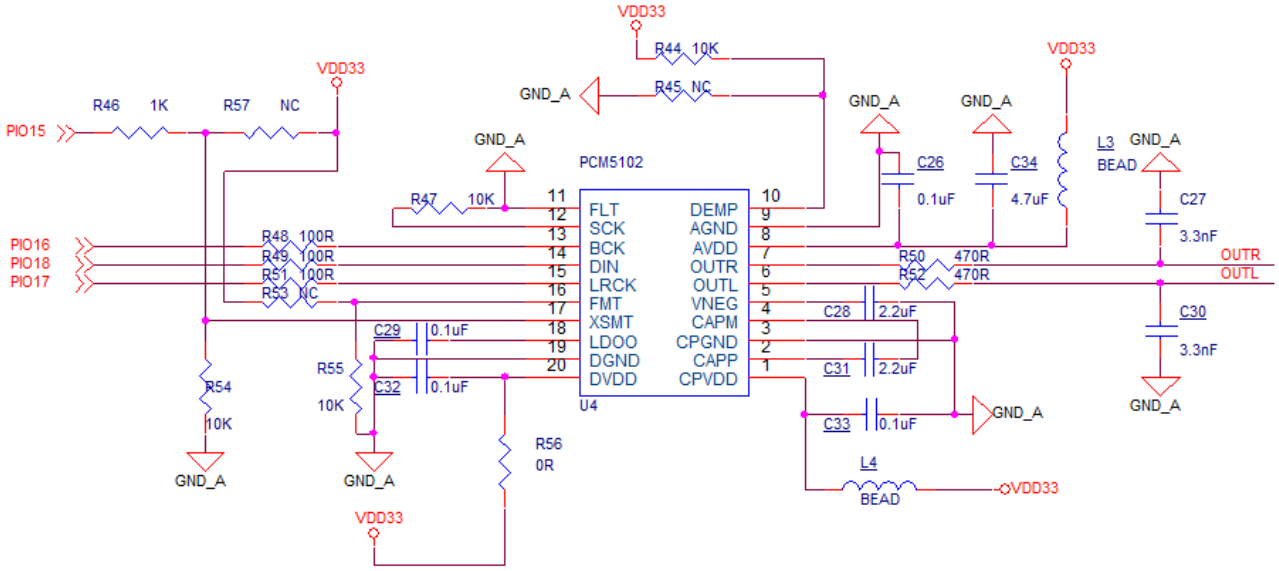

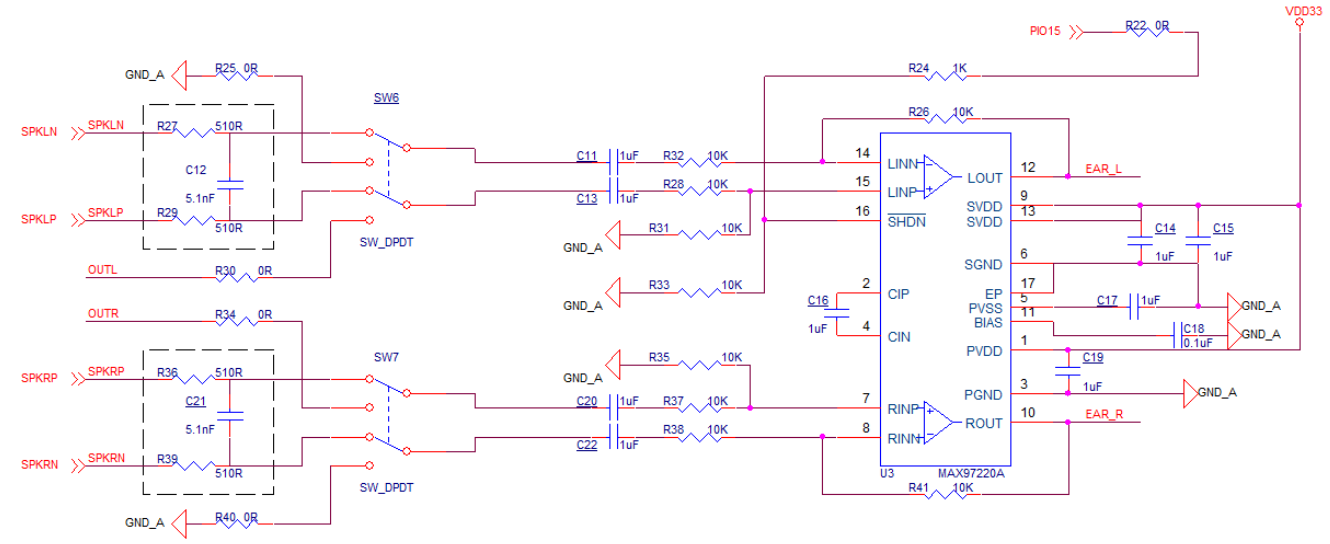
VDD33
PIO15
R22 0R
R24 1K
R26 10K
GND_A
R25 0R
SW6
SPKLN
R27 510R
C12
5.1nF
SPKLP
R29 510R
SW_DPDT
OUTL
R30 0R
C11 1uF
R32 10K
C13 1uF
R28 10K
R31 10K
R33 10K
LINN
LINP
SHDN
LOUT
SVDD
SVDD
SGND
EP
PVSS
BIAS
PVDD
PGND
ROUT
CIP
CIN
RINP
RINN
EAR_L
C14 1uF
C15 1uF
C16 1uF
C17 1uF
C18 0.1uF
C19 1uF
EAR_R
U3
MAX97220A
R41 10K
OUTR
R34 0R
SW7
SPKRP
R36 510R
C21
5.1nF
SPKRN
R39 510R
SW_DPDT
R40 0R
R35 10K
C20 1uF
R37 10K
C22 1uF
R38 10K

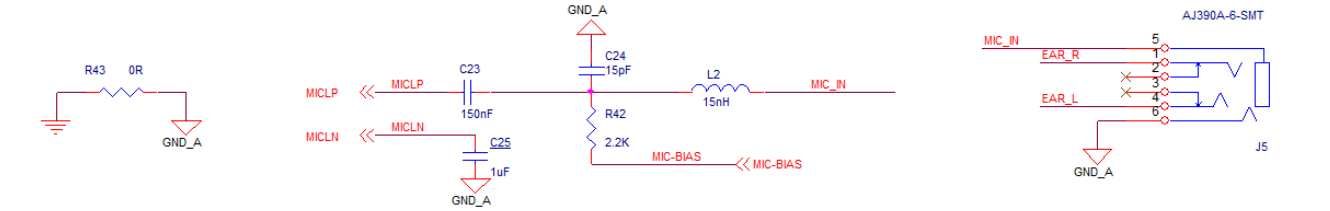
R43 0R
GND_A
MICLP
MICLN
C23
150nF
C24
15pF
R42
2.2K
L2
15nH
MIC_IN
C25
1uF
MIC-BIAS
AJ390A-6-SMT
EAR_R
EAR_L
J5

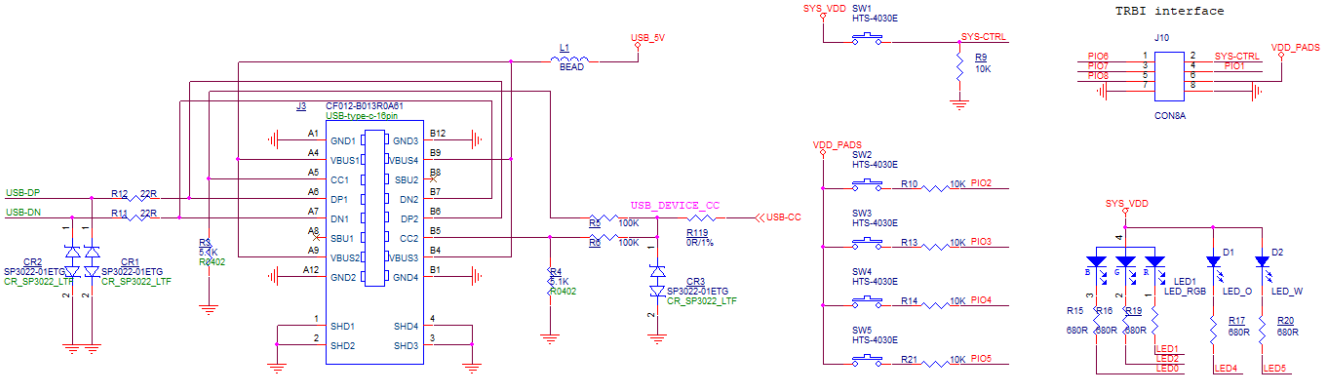
L1
BEAD
USB_5V
J3
CF012-B013R0A61
USB-type-c-16pin
USB-DP
USB-DN
R12 22R
R14 22R
CR2
SP3022-01ETG
CR_SP3022_LTF
CR1
SP3022-01ETG
CR_SP3022_LTF
R5
5.6K
R0402
R4
1K
R0402
USB_DEVICE_CC
R5 100K
R6 100K
R119
0R/1%
USB-CC
CR3
SP3022-01ETG
CR_SP3022_LTF
SYS_VDD
SW1
HTS-4030E
SYS-CTRL
R9
10K
VDD_PADS
SW2
HTS-4030E
R10 10K PIO2
SW3
HTS-4030E
R13 10K PIO3
SW4
HTS-4030E
R14 10K PIO4
SW5
HTS-4030E
R21 10K PIO5
TRBI interface
J10
PIO6
PIO7
PIO8
SYS-CTRL
PIO1
VDD_PADS
CON8A
LED1
LED_RGB
LED_O
LED_W
D1
D2
R15 680R
R16 680R
R19 680R
R17 680R
R20 680R
LED1
LED2
LED0
LED4
LED5

Evaluation board definition

BTM-QC3086-2-DB

Top

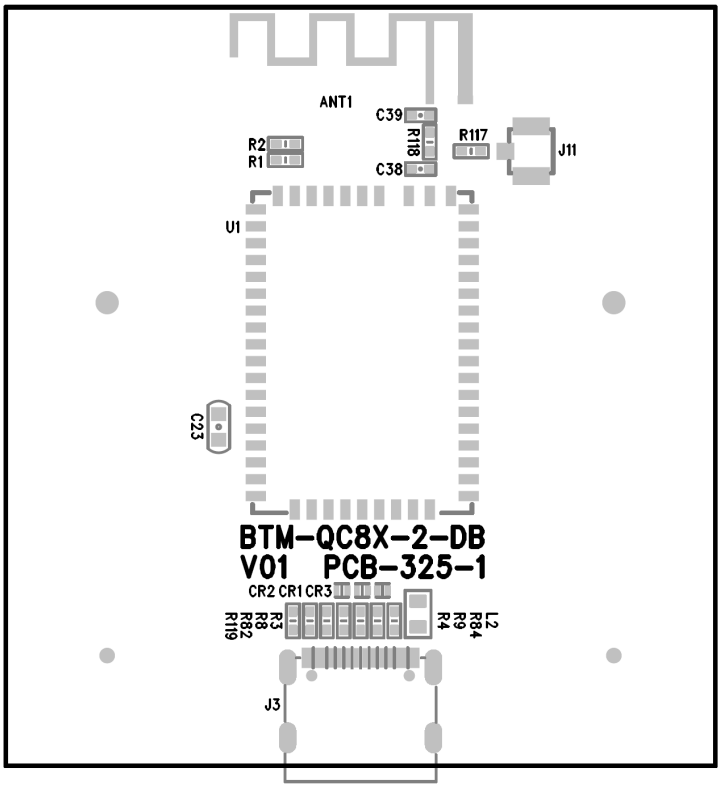

Bottom

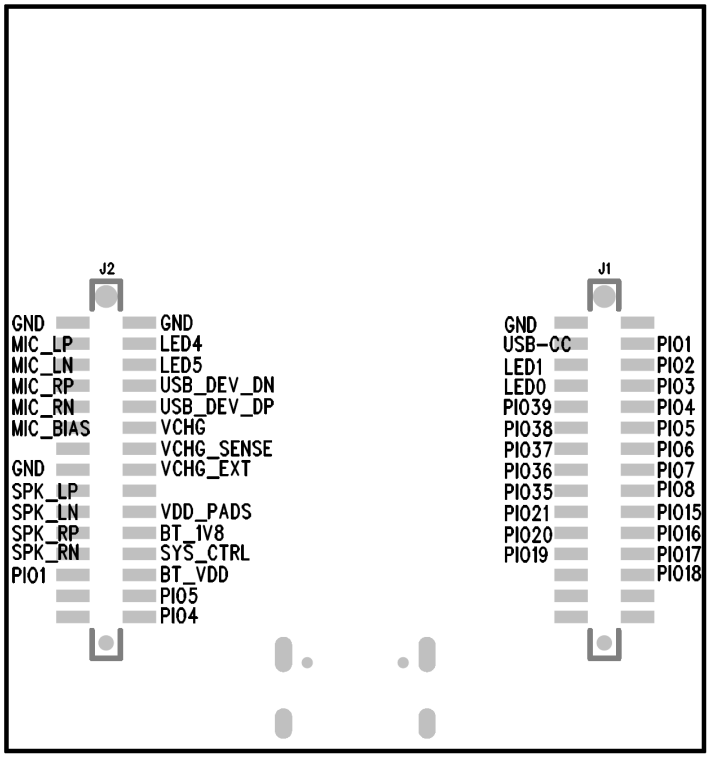

BTM-QC3086-2-EB

Top

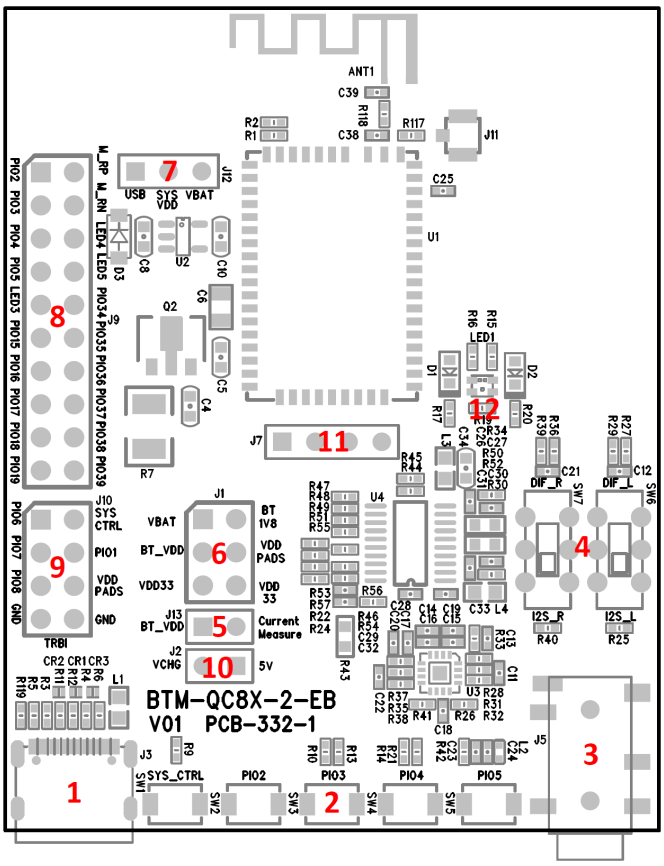

Bottom

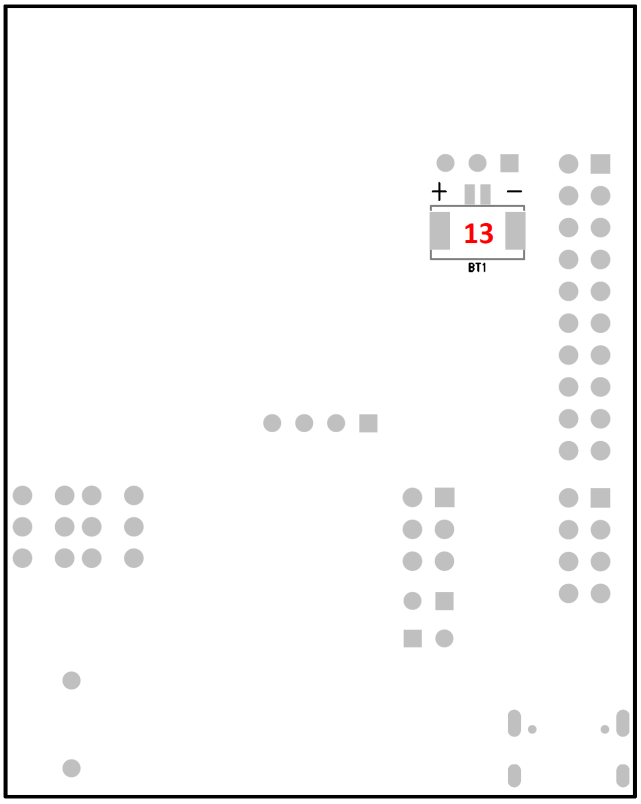

1. Micro USB
   Main USB port
2. Button
   SW1=SYS_CTRL, SW2=PIO2, SW3=PIO3, SW4=PIO4, SW5=PIO5
3. Phone Jack

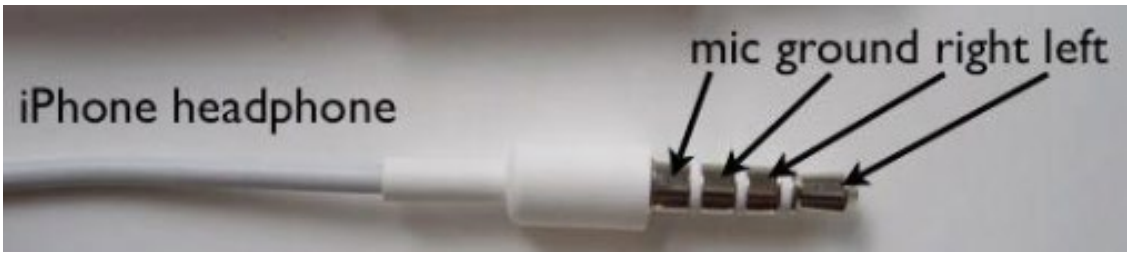

4. DAC/I2S Audio output Switch

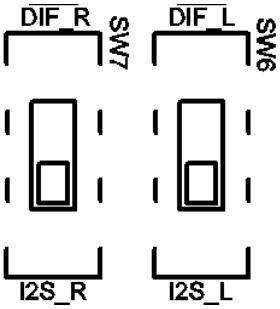

5. Current measure

6. Power source
   BT_VDD
   1-2 short : VBAT
   2-3 short : VDD33
   VDD_IO
   1-2 short : 1V8
   2-3 short : 3V3

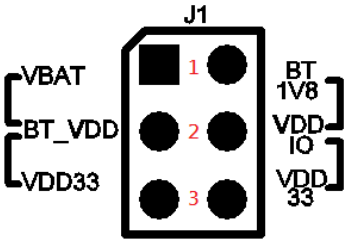

7. VDD33 Power source

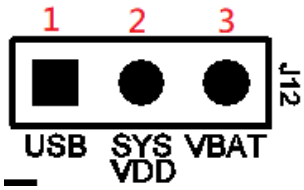

1-2 short : VUSB

2-3 short : VBAT

8. GPIO

PIO4:UART_RX,PIO5:UART_TX

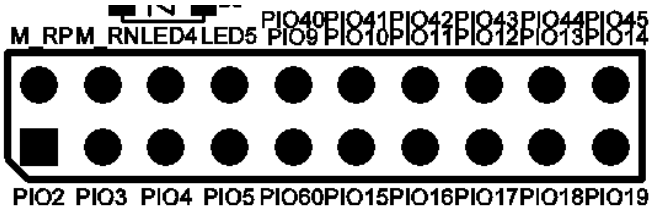

9. TRBI Debug Interface

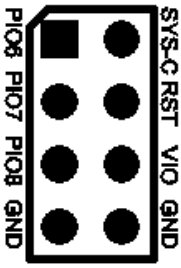

10. USB Power Jumper (VCHG Source)

11. OLED Interface(PIO20:SCL,PIO21:SDA)

12. LED

LED0: Blue,

LED1: Red

LED2: Green

13. Battery connector

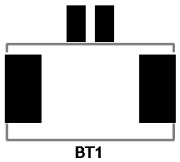

BTM-QC30XX/51XX-MB

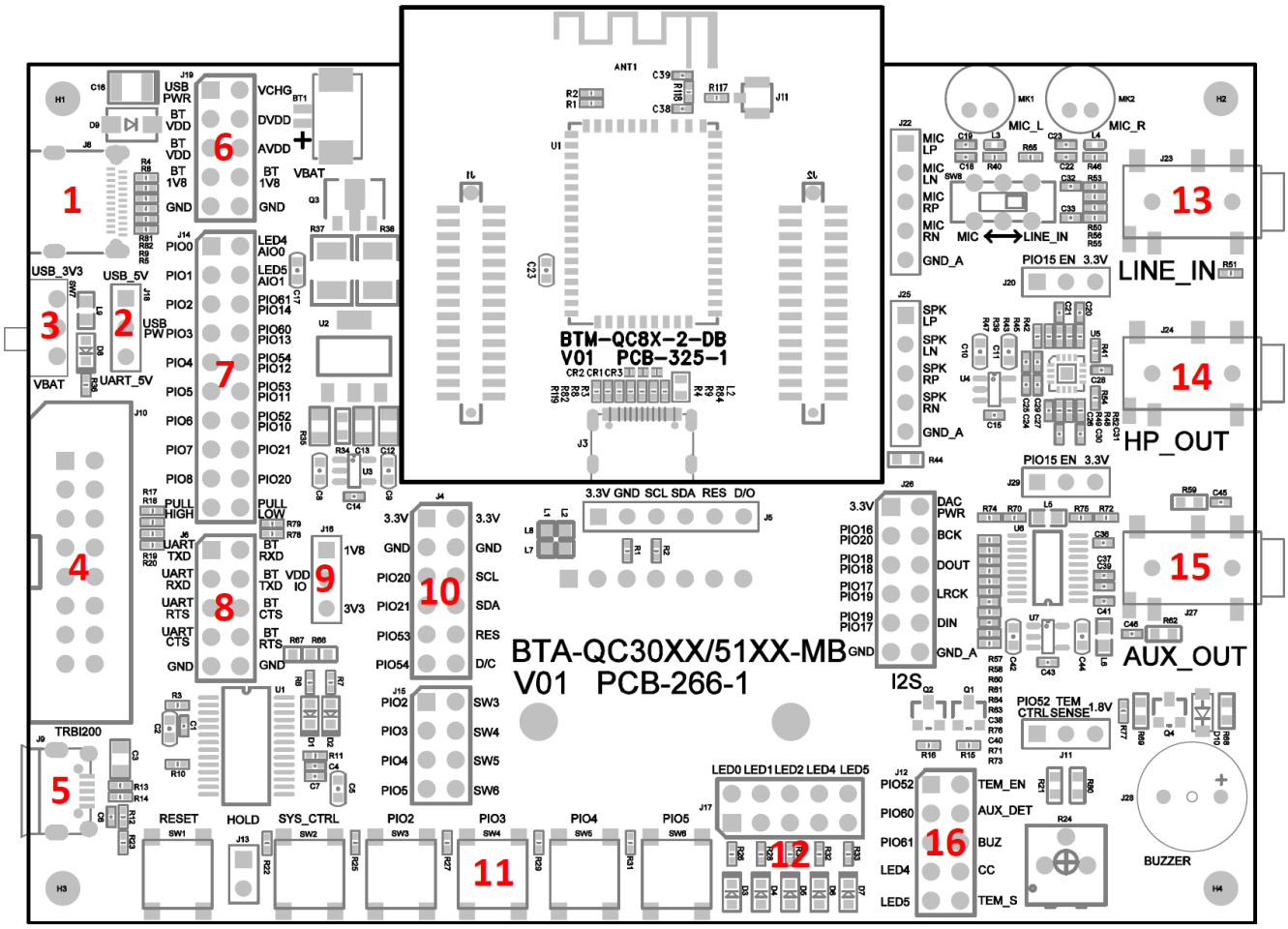

1. USB-TYPE C
   Main USB port
2. USB Power source
   1-2 short : USB Type C
   2-3 short : Micro-USB

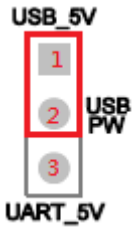

3. Power Switch
   UP: VDD_33 on or VBAT off.
   Down: VBAT on or power VDD_33 off.
4. TRBI
   Interface for TRBI2000 Tool kit
5. USB-Micro USB
   It must be connected to this port as you use the UART function.
6. GPIO
   Full PIO/AIO test pin.
7. Power source selector
   Header default setting

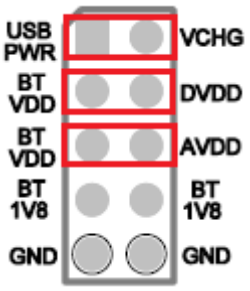

8. UART
   Header default setting
   BT_TX=PIO5, BT_RX=PIO4
   MB DB

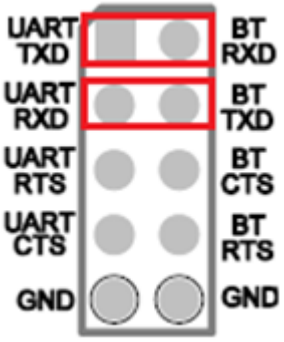

9. VDD_IO
   1-2 short: 1V8
   2-3 short: 3V3

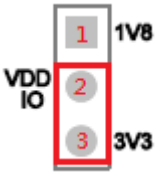

10. I2C(Display)

    Header default setting

    SCL=PIO20, SDA=PIO21

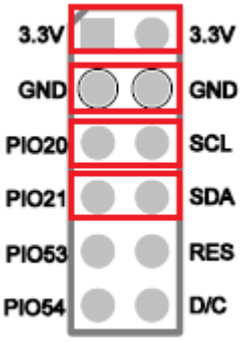

11. Button

    Header default setting:

    Reset=PIO0, SYS_CTRL=PIO1, SW3=PIO2, SW4=PIO3, SW5=PIO4, SW6=PIO5

12. LED

    Header default setting

    LED_G=LED0, LED_B=LED1, LED_R=LED2, LED_O=LED4, LED_W=LED5

13. MIC/LINE IN

    Switch setting

    Left: MIC In

    Right: Line in

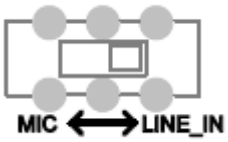

14. HP OUT

    1-2 short: PIO15 enable

    2-3 short: 3.3V enable

15. AUX OUT

1-2 short: PIO15 enable

2-3 short: 3.3V enable

Header default setting

BCLK=PIO16, DOUT=PIO, DIN=PIO19, LRCK=PIO17

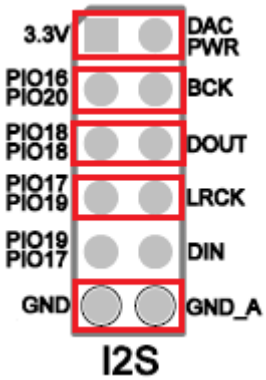

16. TEM EN/Buzzer/AUX_DET/CC/TEM_S

Header default setting

TEM EN=PIO52, LINE IN_DET=PIO60, Buzzer=PIO61, CC_Type C=LED4,

TEM S=LED5